ITEM NO.	PART NUMBER	DESCRIPTION	QTY.
1	13363	SHAFT	1
2	12211	BALL BEARING	2
3	19789	BODY	1
4	12314	TYPE 6A SEAL/SEAT ASSY	1
5	04258	EXT. RETAINING RING	3
6	04259	INT. RETAINING RING	2
7	04264	FLAT WASHER	1
8	05133	SPACER	1
9	12855	GASKET	1
10	12856	WEAR PLATE	1
11	12231	O-RING	1
12	12952	HOUSING	1
13	10929	CAM	1
14	19995	SCREW 1/4-20 ROUND HD	1
15	19996	CAM WASHER	1
16	04432	WOODRUFF KEY	1
17	10615	RUBBER IMPELLER	1
18	12710	LOCKWASHER	3
19	12857	1/4-20 HHCS	3
20	13285	TAG	1
21	23083	LABEL	1
22	15055	PULLEY ASSEMBLY	1

NOTES:
1. APPLY BEAD OF PERMATEX AROUND THREADED HOLE IN CAM PRIOR TO ASSEMBLY, (ITEM 13).
2. USE WATER ONLY WHEN INSTALLING TYPE 6A SEAL/SEAT ASSY, (ITEM 4).
3. USE COOLANT TO AID IN INSTALLATION OF RUBBER IMPELLER, (ITEM 17).
4. TORQUE 1/4-20 HHCS TO 5 - 8 FT/LBS, (ITEM 19).
5. PRESSURE TEST PUMP TO 20 - 30 PSI.
6. PRINT "G50" & "DATE CODE" ON LABEL, (ITEM 21).

PART NUMBER G7B

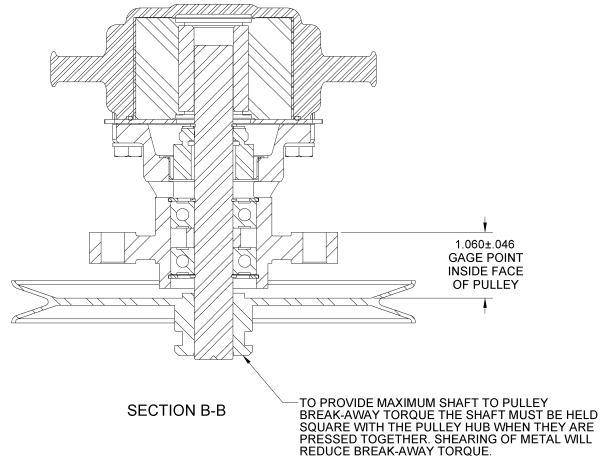

SECTION B-B

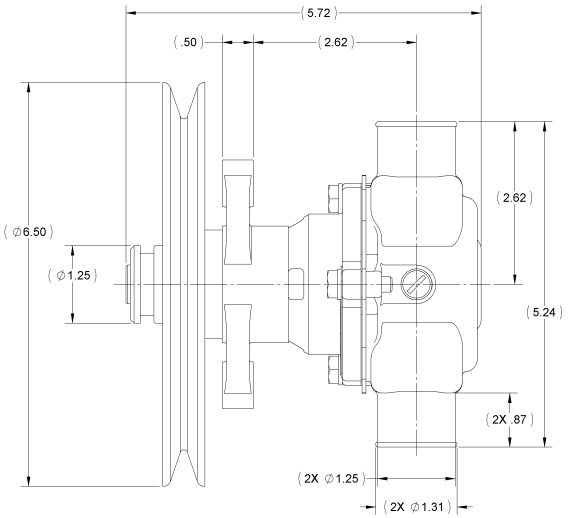

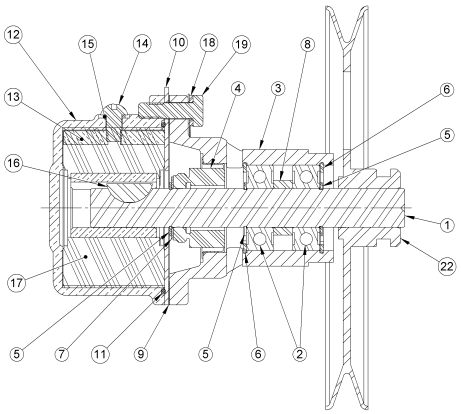

SECTION A-A

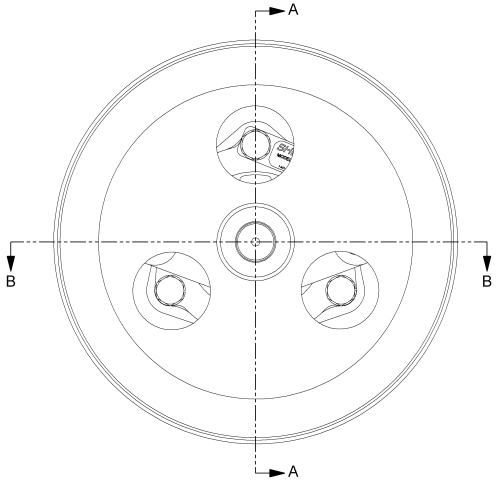

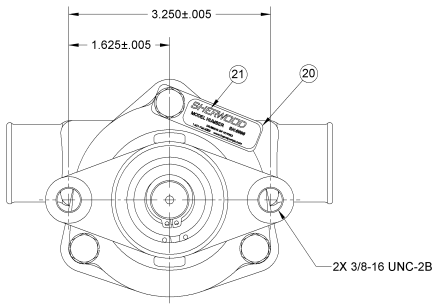

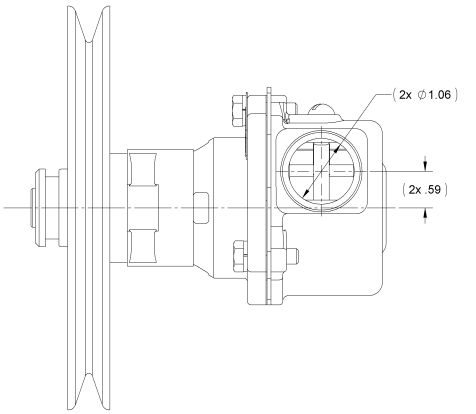

REV.	ECN	REVISION DESCRIPTION	CHKD	DATE
C	6527	REMOVED 12356 SEAT ASSY. & 10515C CAM SCREW ASSY ADDED 19995 CAM SCREW & 19996 CAM WASHER NOTE 2 WAS "USE PAC-EASE OR EQUIV." REDRAWN	PEB	11/16/2007
B	6195	ADDED NOTES. REDRAWN ON NEW FORMAT	PB	6/13/2007

SHERWOOD
A Div. of Hypro Corporation A PENTAIR COMPANY
375 Fifth Avenue NW, New Brighton, MN 55112, (651) 766-6300

DRAWING BASED ON ASME Y14.5M-1994 | DO NOT SCALE PRINT | SIZE D
THIRD ANGLE PROJECTION | SCALE 1:1 | SHEET NUMBER 1 OF 1

PART DESCRIPTION: RUBBER IMPELLLER PUMP

REPLACES PART NO. | REV.
DWG BY: KB DATE: 5/1/1992
CHECKED BY: TLG DATE: 5/18/1992
APPROVED BY: DATE:

THIS DRAWING IS THE PROPERTY OF HYPRO, AND WITHOUT WRITTEN AUTHORIZATION, MUST NOT BE COPIED OR COMMUNICATED.

PART NUMBER G7B | REV. C